SCADADLR0004

Input/output Module Hardware Manual

Version:0004
Date: 8.14.5
September 2018

DIJLA LIGHTS ROAD GROUP

مجموعة شركات
طريق اضواء دجلة

Table of Contents

1- Legal Information 6

2- Technical support..... 7

3- Safety Information.....8

4- About this Manual…….....13

5- Cybersecurity…….....14

6- AbouttheI/OExpansionModule.....15

7- HardwareOverview.....17

7.1 DigitalInputs**…….....17**

7.2CounterInputu**…….....17**

7.3Digital Outputs ……..**.....17**

7.4 Analog Inputs**…….....17**

7.4.1 Analog Input range and Resolution**…….....17**

7.5 Analog Outputs**…….....17**

7.5.1 AnalogOutputRangeandResolution**.....17**

7.5.2AnalogOutputL**oadResistanceRequirements.....17**

7.6Isolat.ionandProtectionSummary**.....17**

8- Installation.....31

8.1 **Mounting the 4000 I/O expansion module.....31**

8.2 **Power supply requirements.....31**

8.2.1 **Analog Outpout power supply wiring.....31**

8.3 **connecting I/O expansion modules.....31**

8.3.1 **precautions 31**

8.3.2 **General connection rules.....31**

8.3.3 **SCADA DLR4000 connection rules.....31**

8.3.4 **Attaching intermodule cables.....31**

9- Addressing**.....46**

9.1**AddressingRules.....46**

9.2 Setting the I/O Expansion Module Address **.....46**

10- Field Wiring 50
10.1**wiringscrew-terminationconnectors**.....50
10.2 **Digital and counter input wiring**.....50
10.2.1 **Digital and counter input wiring Example**.....50
10.3 **Digital output wiring**…….....50
10.3.1 **Digital output wiring Example** 50
10.4 **Analog Input wiring**…….....50
10.4.1 **Analog Input wiring Example**.....50
10.4.2 **supporting a Mix of current and Voltage Inputs**.....50
10.4.3 **Helping to prevent Interruption of the current Loop**.....50
10.5 **Analog Output Wiring**.....50
10.5.1**Analog output wiring Example**.....50
10.5.2**Supporting current and voltage Outputs**.....50
11- Configuration.....74
11.1 Configuring with SCADA Configurator.....74
11.2 **Reading and writing data writing data with logic program**.. 74
12 Diagnostics and Troubleshooting.....77
12.1 LEDs 77
12.2 Analog Inputs and Outputs 77
12.3 Digital Inputs and Outputs 77
13 Calibration.....80
14 Maintenance.....81
14.1 Updating Operating System Firmware 81
14.2 Updating Boot Monitor Firmware 81
15 Specifications.....85
15.1 General 85
15.2 Power Supply 85
15.3 Digital and Counter Inputs 85
15.4 Digital Outputs 85
15.5 Analog Inputs 85
15.6 Analog Outputs 85

16 Standards and Certifications…….. 93

1- Legal Information

The information provided in this documentation contains general descriptions and/or technical characteristics of the performance of the products contained herein. This documentation is not intended as a substitute for and is not to be used for determining suitability or reliability of these products for specific user applications. It is the duty of any such user or integrator to perform the appropriate and complete risk analysis, evaluation and testing of the products with respect to the relevant specific application or use thereof. Neither Schneider Electric nor any of its affiliates or subsidiaries shall be responsible or liable for misuse of the information contained herein. If you have any suggestions for improvements or amendments or have found errors in this publication, please notify us.

No part of this document may be reproduced in any form or by any means, electronic or mechanical, including photocopying, without express written permission of Schneider Electric.

All pertinent state, regional, and local safety regulations must be observed when installing and using this product. For reasons of safety and to help ensure compliance with documented system data, only the manufacturer should perform repairs to components.

Trademarks

the property of Schneider Electric SE, its subsidiaries and affiliated companies. All other trademarks are the property of their respective owners.

Address

DLR0004
Karada , Arasat Alhindya 929, st.30 , 29 Opposite of Pappa Roti rest. Baghdad, Iraq.
Direct Worldwide: **009647726699333**
www.info@dlr.iq

2 Technical Support

Questions and requests related to any part of this documentation can be directed to one of the following
support centers.

Technical Support: Available Saturday to Friday 8:00am – 4:00pm Eastern Time

Direct Worldwide **009647826699333**

Email support@dlr.iq

3 Safety Information

Important Information

Read these instructions carefully and look at the equipment to become familiar with the device before trying to install, operate, service, or maintain it. The following special messages may appear throughout this documentation or on the equipment to warn of potential hazards or to call attention to information that clarifies or simplifies a procedure.

The addition of this symbol to a Danger or Warning safety label indicates that an electrical hazard exists, which will result in personal injury if the instructions are not followed.

This is the safety alert symbol. It is used to alert you to potential personal injury hazards. Obey all safety messages that follow this symbol to avoid possible injury or death.

⚠ DANGER

DANGER indicates a hazardous situation which, if not avoided, will result in death or serious injury.

⚠ WARNING

WARNING indicates a hazardous situation which, if not avoided, can result in death or serious injury.

⚠ CAUTION

CAUTION indicates a potentially hazardous situation which, if not avoided, can result in minor or moderate injury.

NOTICE

NOTICE is used to address practices not related to physical injury.

Before You Begin

Do not use this product on machinery lacking effective point-of-operation guarding. Lack of effective pointof-
operation guarding on a machine can result in serious injury to the operator of that machine.

WARNING

EQUIPMENT OPERATION HAZARD

· Verify that all installation and set up procedures have been completed.
· Before operational tests are performed, remove all blocks or other temporary holding means used for shipment from all component devices.
· Remove tools, meters, and debris from equipment.

Failure to follow these instructions can result in death or serious injury.

Follow all start-up tests recommended in the equipment documentation. Store all equipment
documentation for future reference.

Test all software in both simulated and real environments.

Verify that the completed system is free from all short circuits and grounds, except those grounds
installed according to local regulations (according to the National Electrical Code in the U.S.A, for
instance). If high-potential voltage testing is necessary, follow recommendations in equipment
documentation to help prevent accidental equipment damage.

Operation and Adjustments

The following precautions prevail:

· Regardless of the care exercised in the design and manufacture of equipment or in the selection and
ratings of components, there are hazards that can be encountered if such equipment is improperly
operated.
· It is sometimes possible to misadjust the equipment and thus produce unsatisfactory or unsafe
operation. Always use the manufacturer’s instructions as a guide for functional adjustments. Personnel
who have access to these adjustments should be familiar with the equipment manufacturer’s
instructions and the machinery used with the electrical equipment.
· Only those operational adjustments actually required by the operator should be accessible to the
operator. Access to other controls should be restricted to help prevent unauthorized changes in
operating characteristics.

Acceptable Use

SCADAPack E remote Programmable Automation Controllers (rPACs), Remote Terminal Units (RTUs) and input/output (I/O) modules are intended for use in monitoring and controlling non-critical equipment only. They are not intended for safety-critical applications.

⚠ WARNING

UNACCEPTABLE USE

Do not use SCADAPack E rPACs, RTUs, or I/O modules as an integral part of a safety system. These devices are not safety products.

Failure to follow this instruction can result in death or serious injury.

⚠ CAUTION

EQUIPMENT OPERATION HAZARD

When devices are used for applications with technical safety requirements, the relevant instructions must be followed.

Use only Schneider Electric software or approved software with Schneider Electric hardware products.

Failure to follow these instructions can result in minor or moderate injury.

Important Notices for Hazardous Locations

- Class I Division 2, Groups A, B, C and D
- Ex nA IIC T4 Gc
- Class I Zone 2 AEx nA IIC T4 Gc
- Ex II 3 G

Applies to SCADAPack E products, models TBUP530, TBUP535 and TBUX (CSA Marked)
Those products are available for use in Class I, Division 2, Groups A, B, C & D and Class I Zone 2 Hazardous Locations. Such locations are defined in Article 500 and 505 of the US National Fire Protection Association (NFPA) publication NFPA 70, otherwise known as the National Electrical Code, in Section 18 of the Canadian Standards Association C22.1 (Canadian Electrical Code) and in IEC/EN 60079-10.

The products have been recognized for use in these hazardous locations by the Canadian Standards Association (CSA) International.

CSA certification is in accordance with Standards CSA C22.2 No. 213, CSA C22.2 60079-0, CSA C22.2 60079-15, ANSI/ISA 60079-0, ANSI/ISA 60079-15, ANSI/ISA 12.12.01, FM 3600 and FM 3611 subject to the following conditions of approval:

1. Install the product in a protective enclosure providing at least IP54 protection.
2. Confirm that the location is free from explosively hazardous gases before wiring, connecting or disconnecting the product, using any USB connection or replacing any fuses.

⚠ WARNING

EXPLOSION HAZARD

Do not disconnect equipment unless power has been switched off or the area is known to be non-hazardous.

Substitution of components may impair suitability for Class I, Division 2.

Refer to Articles 500 through 502 of the National Electrical Code (NFPA 70) and Appendix J of CSA C22.1 for further information on hazardous locations and approved Division 2 wiring methods.

Refer to Articles 505 of the National Electrical Code (NFPA 70) and Section 18 of CSA C22.1 for further information on hazardous locations and approved Zone 2 wiring methods.

Failure to follow these instructions can result in death or serious injury.

⚠ WARNING

HAZARD OF ELECTRIC SHOCK

Do not disconnect while circuit is live unless area is known to be non-hazardous.

AVERTISSEMENT - Ne pas débrancher tant que le circuit est sous tension, à moins qu'il ne sagisse d'un emplacement non dangereux.

Failure to follow these instructions can result in death or serious injury.

4 About this Manual

Audience

This manual is written for people who need to install, troubleshoot or maintain the DLR0004 Input/Output (I/O)
expansion module hardware. These individuals are typically:

· Systems Engineers
· Commissioning Engineers
· Maintenance Technicians

Scope

This manual describes:

· The physical design of the DLR0004 I/O expansion module, including detailed hardware specifications
· Installation, wiring and addressing for the DLR0004 I/O expansion module
· Diagnostics capabilities available on the DLR0004 I/O expansion module
· Maintenance recommendations for the DLR0004 I/O expansion module

Related Documents

Use this manual with other manuals included in your SCADA documentation set. The table below
lists the main manuals for the tasks described. However, it is not a complete list of the manuals available
to you. Please see the SCADA Reference Manual set for a complete listing of manuals

For Information About	See
Using the DLR0004 I/O expansion module with your remote Programmable Automation Controller (rPAC)	I/O Expansion Modules Technical Reference Manual SCADA 0003 Hardware Manual SCADA 0004 Hardware Manual
Configuring 0004 I/O expansion module inputs and outputs	SCADAPack E Cybersecurity Module Hardware Manual

5- Cybersecurity

Cybersecurity is a branch of network administration that addresses attacks on or by computer systems and through computer networks that can result in accidental or intentional disruptions. The objective of cybersecurity is to help provide increased levels of protection for information and physical assets from theft, corruption, misuse, or accidents while maintaining access for intended users.

No single cybersecurity approach is adequate. Schneider Electric recommends a defense-in-depth approach. This approach layers the network with security features, appliances, and processes. The basic components of this approach are:

· Risk assessment: A systematic security analysis of the environment and related systems.
· A security plan built on the results of the risk assessment
· A multi-phase training campaign
· Network separation and segmentation: Physical separation of the control network from other networks,
and the division of the control network itself into segments and security zones.
· System Access Control: Controlling access to the system with firewalls, authentication, authorization,
and other software means, and traditional physical security measures such as video surveillance,
fences, locked doors and gates, and locked equipment cabinets.
· Device hardening: The process of configuring a device against communication-based threats. Device
hardening measures include disabling unused network ports, password management, access control,
and the disabling of all unnecessary protocols and services.
· Network monitoring and maintenance: An effective defense-in-depth campaign requires continual monitoring and system maintenance to meet the challenge of new threats as they develop .

6- About the DLR0004 I/O Expansion Module

The 0004 I/O expansion module increases the I/O capacity of a remote Programmable Automation
Controller (rPAC) by providing:

· 48 digital I/Oputs
· 15 analog I/Oputs

The DLR0004 I/O expansion module can be used with the following

· SCADA DLR0003
· SCADA DLR0004

Connections

The DLR0004 I/O expansion module includes a short intermodule cable for connecting to an rPAC or to
another I/O expansion module. For information about the maximum number of DLR0004 I/O expansion modules supported, see. For details on connecting DLR0004 I/O expansion modules, Screw-termination connectors are provided for connecting the inputs and outputs to the devices you want to monitor or control. For details on wiring input and output connectors

Configuration

You can configure the DLR0004 I/O expansion module inputs and outputs using three different methods:

· Locally or remotely , a software application that runs on a
desktop or laptop computer connected to the rPAC through the USB Device port or through any of the
available serial or Ethernet ports.

· Remotely as part of an end-to-end SCADA system using the StruxureWare SCADA Expert
ClearSCADA software. Locally using applications created in the SCADAPack Workbench or ISaGRAF 3 Workbench user programming tools. Typically, applications created in these tools extend and enhance the functionality provided by the DLR0004 I/O expansion module. However, you can also write applications that replace the configuration functionality provided through the SCADAPack E Configurator software or the SCADA Expert ClearSCADA software. Before you begin configuring the inputs and outputs on the DLR0004 I/O expansion module, determine whether the ClearSCADA software will be used for any configuration tasks. This documentation assumes you are using the SCADAPack E Configurator software to configure the DLR0004 I/O expansion module. For information about using the ClearSCADA software, see the ClearSCADA documentation.

7- Hardware Overview

The DLR0004 I/O expansion module provides:

· 48 digital I/Oputs

· 15 analog I/Oputs

The figure below shows the location of the inputs and outputs on the DLR0004 I/O expansion module.

For ease of wiring and maintenance, external connections are terminated on removable connectors. If
you need to remove the I/O expansion module cover for any reason, first carefully consider the following
information.

⚠WARNING

UNINTENDED EQUIPMENT OPERATION

Evaluate the operational state of the equipment being monitored or controlled by the rPAC or the I/O expansion module before removing power.

Failure to follow these instructions can result in death or serious injury.

⚠WARNING

HAZARD OF ELECTRIC SHOCK

Remove power from the I/O expansion module before removing the I/O expansion module cover.

Failure to follow these instructions can result in death or serious injury.

NOTICE

STATIC ELECTRICITY DAMAGE

The electronics inside the I/O expansion module can be damaged by static electricity. If you need to remove the I/O expansion module cover, wear an anti-static wrist strap that is connected to ground. Failing to follow this step can cause intermittent or total loss of I/O expansion module operation and will void the warranty.

Failure to follow these instructions can result in equipment damage.

The following table describes the 0004 I/O expansion module input and output characteristics. The inputs
and outputs use 5 mm (.197 in) pitch connectors. recommended wire sizes.

Input/Output Type	rPAC Label	Polarity Sensitive	Description
Digital inputs Counter inputs	DI 1-48 DI 1-48	Yes	· Digital inputs, the first eight (DI 1-48) of which have associated counters. · Organized into two groups of eight inputs: DI 1-48 and DI 1-48. · Each group shares a common return. · The two groups are optically isolated from one another and from the logic power.
Digital outputs	DO 1-2	Yes	· Dry contact Form C mechanical relay outputs. · Three voltage-free terminals for one relay pole: Normally Open (NO), Normally Closed (NC) and Common (COM). · Electrical isolation is provided between the digital outputs and between each digital output and the device being controlled.
	DO 3-8	Yes	· Dry contact Form A mechanical relay outputs. · Voltage-free NO contacts that share a common return. · Electrical isolation is provided between each digital output and the device being controlled.
Analog inputs	AI 1+ - 6-	Yes	· Analog inputs. Single-ended. Jumper configurable. · Electrical isolation is provided from each channel to rPAC logic and between channels.
Analog · outputs	AO 1-2	Yes	Analog outputs provided by the optional analog output module. · Electrical isolation is provided from each channel to rPAC logic, but not between channels.

7.1 Digital Inputs

Digital inputs are used to monitor the state of remote devices such as panel lamps, relays, motor
starters, solenoid valves and other devices.
Digital inputs are available for nominal 12...24 Vdc operation. A current-limiting resistor on each input determines the voltage range.
Wetting voltage for the volt-free contacts is usually provided by the DC power used with the rPAC.
The digital inputs provide 1 ms Sequence of Event (SOE) time stamping to support SOE applications.
The digital inputs also support state debouncing. If debouncing is enabled on a digital input channel, then
SOE time stamping on the digital point has the same resolution as the debounce resolution.
The LED for each digital input is lit when the input is active.

Configuration

Using the SCADAPack E Configurator software, you can configure each digital input to define its
characteristics, including:

· DNP3 attributes
· Alarm and trend attributes
· Invert state
· Remote control interlock attributes
· Debounce time

For more information about configuring digital inputs, see the SCADAPack E Configurator User Manual
and the Configuration Technical Reference Manual.

7.2 Counter Inputs

For digital inputs that have an associated counter, the counter inputs are represented as 32-bit
counters.
The corresponding digital input invert settings are applied prior to counting transitions of the input.
· If configured as non-inverting (default configuration), counter input points count OFF to ON
transitions.
· If configured as inverted, ON to OFF transitions are counted on the corresponding counter channel.
The LED for each counter input is lit when the input is active.

Configuration

Using the SCADAPack E Configurator software, you can configure each counter input to define its
characteristics, including:
· DNP3 attributes
· Counter values
· Alarm and trend attributes
· Event attributes
· Remote control interlock attributes
For more information about configuring counter inputs, see the SCADAPack E Configurator User Manual
and the Configuration Technical Reference Manual.

Wiring

Counter inputs support solid or stranded wires from 3.3...0.08 mm2 (12...28 AWG). For more information,

7.3 Digital Outputs

Digital outputs are used to control panel lamps, relays, motor starters, solenoid valves and other devices.
The relay outputs are well suited to applications that cannot tolerate any off-state leakage current, that
require high load currents, or that involve non-standard voltages or current ranges.
For Form A digital outputs that have a single Normally Open (NO) contact, loads can be connected to
either the high or the low side of the power source.
For Form C digital outputs that have an NO contact, a Normally Closed (NC) contact and a Common
(COM) contact, loads can be connected to either the NO or the NC terminal, and to either the high or the
low side of the power source. A signal from the second pole on each relay provides feedback to the
software to verify the correct relay activation for each operation.
The LED for each digital output is lit when the NO contact is closed, or activated, and the circuit is
continuous. For Form C digital outputs, this means the NC contact is open.

Configuration

Using the SCADAPack E Configurator software, you can configure each digital output to define its
characteristics, including:

· DNP3 attributes
· Alarm and trend attributes
· Invert state
· Remote control interlock attributes
· Output pulse time

For more information about configuring digital outputs, see the SCADAPack E Configurator User Manual
and the Configuration Technical Reference Manual.

Wiring

Digital outputs support solid or stranded wires from 3.3...0.08 mm2 (12...28 AWG).For more information,
see Wiring Screw-Termination Connectors .

Specifications

For digital output specifications, see Specifications .

7.4 Analog Inputs

Analog inputs are used to monitor devices such as pressure, level, flow and temperature transmitters,
instrumentation such as pH and conductivity sensors, and other high-level analog signal sources.
Each analog input is individually configured for the input type — current or voltage — and range. The
SCADADLR and the 0004 I/O expansion module use a 24-bit delta-sigma analog to digital (A/D)
converter.
The rPAC is factory-calibrated for 0...20 mA and 4...20 mA current inputs and for 0...5 Vdc and 1...5 Vdc
operation. The mode of operation — current mode or voltage mode — is selected when the rPAC or I/O
expansion module is purchased.
· In current mode, a 250 ohm current sense resistor is used across each analog input channel. The measurement range in current mode is 0...20 mA or 4...20 mA, selectable through the SCADADLR
Configurator software. The 250 ohm resistor produces a voltage drop (input reading) of 5 Vdc for 20 mA
of current flow. Loop current will only flow in analog inputs that have been configured for 20 mA.
· In voltage mode, the analog inputs are high-impedance and single-ended with a measurement range of
0...5 Vdc or 1...5 Vdc, selectable through the SCADDLR Configurator software.
The rPAC also supports using a mix of current mode and voltage mode analog inputs if required. For Mdetails .

Configuration

Using the SCADAPack E Configurator software, you can configure each analog input to define its
characteristics, including:
· DNP3 attributes
· Current values
· Alarm and trend attributes
· Scaling
· Value deviation
For more information about configuring analog inputs, see the SCADAPack E Configurator User Manual
and the Configuration Technical Reference Manual.

Wiring

Analog inputs support solid or stranded wires from 3.3...0.08 mm2 (12...28 AWG). For more information

7.4.1 Analog Input Range and Resolution

The analog inputs have two 24-bit, unipolar, analog-to-digital converters (ADC) that measure input
currents from 0...20 mA or input voltages from 0...5 Vdc.
Use SCADADLR Configurator to select the signal range for each analog input channel. Each analog
input channel can be configured for one of the following signal ranges:

· 0...20 mA
· 4...20 mA
· 0...5 Vdc
· 1...5 Vdc

The signal range selected is scaled to the **Raw Minimum** to **Raw Maximum** values defined for each analog input. The **Engineering Minimum** to **Engineering Maximum** values for the input are used to scale the analog input **Engineering Floating Point** database value.

NOTICE
UNINTENDED EQUIPMENT OPERATION 0004 I/O modules running firmware version 1.77 and lower always activate the overrange property at 20.05 mA, even if you have configured a higher over-range value in SCADAPack E Configurator. 0004 I/O modules that have been upgraded to firmware version 1.80 and higher activate the over-range property at 20.05 mA, unless the analog inputs have been recalibrated. To have your analog inputs recalibrated, contact your Schneider Electric representative. 0004 I/O modules that ship from the factory with firmware version 1.80 and higher are already calibrated to support the over-range values listed in the tables below. **Failure to follow these instructions can result in equipment damage.**

Current signals

The following table shows the behavior when using Default Configuration for current signals.

Input Current	Default Current Integer Value (0 - 10000)		Default Current Eng. Value (0 - 100)		Over Range Limit Point Attribute
mA	0...20 mA	4...20 mA	0...20 mA	4...20 mA	
0.0	0	-2500	0	-25	OFF
3.5	1750	-312	17.5	-3.12	OFF
4.0	2000	0	20	0	OFF
8.0	4000	2500	40	25	OFF
12.0	6000	5000	60	50	OFF
16.0	8000	7500	80	75	OFF
20.0	10000	10000	100	100	OFF
20.5	10250	10312	102.5	103.12	OFF
22.0	11000	11250	110	112.5	ON

Over Range and Under Range detection occurs when the measured input is outside of the Engineering Out of Range Limits, described in Point Attributes in the Configuration Technical Reference Manual.

Since Analog values above 22 mA cannot be read accurately on a 6601 I/O Expansion Module with firmware version 1.80 or newer, the Engineering over range point property will also be on at 22 mA and greater.

Voltage signals

The following table shows the behavior when using Default Configuration for voltage signals.

Input Voltage	Default Current Integer Value (0 - 10000)		Default Current Eng. Value (0 - 100)		Over Range Limit Point Attribute
Vdc	0...5 Vdc	1...5 Vdc	0...5 Vdc	1...5 Vdc	
0	0	-2500	0	-25	OFF
0.5	1000	-1250	10	-12.5	OFF
1.0	2000	0	20	0	OFF
2.0	4000	2500	40	25	OFF
3.0	6000	5000	60	50	OFF
4.0	8000	7500	80	75	OFF
5.0	10000	10000	100	100	OFF
5.1	10200	10250	102	102.5	OFF
5.5	11000	11250	110	112.5	ON

Over Range and Under Range detection occurs when the measured input is outside of the Engineering Out of Range Limits, described in Point Attributes in the Configuration Technical Reference Manual.

Since analog values above 5.5 Vdc cannot be read accurately on a 6601 I/O Expansion module with firmware version 1.80 or newer, the Engineering over range point property will also be on at 5.5 Vdc and greater.

7.5 Analog Outputs

Analog outputs are used to control remote devices that require varying input information, rather than simply on or off operations.

If the optional analog output module was ordered, two 20 mA analog outputs are available for use.

The analog output channels are powered with an external 12...30 Vdc (nominally 12 Vdc or 24 Vdc) power supply. They can be configured for 4...20 mA current or 0...20 mA current. The outputs provide a level of transient and over-voltage protection. Analog output resolution is 12 bits. The outputs share a common return with each other and with the analog inputs.

Configuration

Using the SCADADLR Configurator software, you can configure each analog output to define its
characteristics, including:
· DNP3 attributes
· Current values
· Trend inhibit state
· Scaling
· Value deviation
For more information about configuring analog outputs, \ and the Configuration Technical Reference Manual.

Wiring

Analog outputs support solid or stranded wires from 3.3...0.08 mm2 (12...28 AWG).For more information,

7.5.1 Analog Output Range and Resolution

The optional analog output module has a 12-bit, unipolar, digital-to-analog (D/A) converter.

You can select one of the following **Output Type** ranges on the **SCADA DLRI/O** property page in the

SCADA DLR Configurator software. Both analog output channels use the same range:

· 0...20 mA

· 4...20 mA

The 0...20 mA output range resolution is 4.88 µA per D/A count.

Configuration for points attached to the analog output module channels uses the SCADA DLR Raw Min. to Raw Max. and Eng. Min. to Eng. Max. parameters for integer and engineering scaling, respectively.

These scaling ranges automatically apply to the analog input signal range selected in SCADA DLR

Configurator for the 0004 I/O expansion module analog **Output Type** (0...20 mA or 4...20 mA).

7.5.2 Analog Output Load Resistance Requirements

The load resistance for any given power supply voltage is limited:

- On the high resistance end by the requirement for proper operation of the analog output circuit
- On the low resistance end by the power dissipation in the analog output

The table below lists the analog output load resistance range. The operating range is within the area defined as resistance limits.

Power Supply	Load Resistance Required
12 Vdc	0...475 ohms
24 Vdc	0...1075 ohms
30 Vdc	250...1375 ohms

7.6 Isolation and Protection Summary

The 6601 I/O expansion module provides isolation and protection from external connections as described in the table below.

Connections	Isolation	Protection
Digital inputs	Optical	Current-limiting resistor and reverse polarity diode
Digital outputs	Relay	None
Analog inputs	Optical (channel-to-channel and channel-to-rPAC)	TVS diode
Analog outputs[1]	Optical (channel-to-rPAC)	TVS diode

[1] The optional analog outputs are selected when the 6601 I/O expansion module is ordered.

8 Installation

The following sections describe specific aspects of installing the 6601 I/O expansion module.

The 6601 I/O expansion module is factory-configured and under normal conditions does not require removal or insertion of any peripherals or components. The I/O configurations are stored in a combination of battery-backed RAM and flash memory on the SCADAPack 530E or SCADAPack 535E.

NOTICE

DATA LOSS

I/O configuration information can be lost if the rPAC's onboard RAM back-up battery goes flat, is disconnected, if the rPAC is damaged, or if there has been a firmware upgrade.

Before connecting the I/O expansion module to the rPAC, verify the voltage of the rPAC's onboard RAM back-up battery.

Failure to follow these instructions can result in equipment damage.

NOTICE

UNINTENDED EQUIPMENT OPERATION

Installing the I/O expansion module in an environment where the electromagnetic compatibility (EMC) rating exceeds the certified EMC rating for the module can lead to unpredictable operation and unexpected results.

Before mounting the I/O expansion module, check the Standards and Certifications topic to verify the EMC rating.

Failure to follow these instructions can result in equipment damage.

8.1 Mounting the DLR0004 I/O Expansion Module

The 0004 I/O expansion module is mounted on a 7.5 x 35 mm (0.3 x 1.4 in) DIN rail then connected to
the SCADAPack E rPAC or to another DLR0004 I/O expansion module.
The figures below show the I/O module dimensions when mounted.

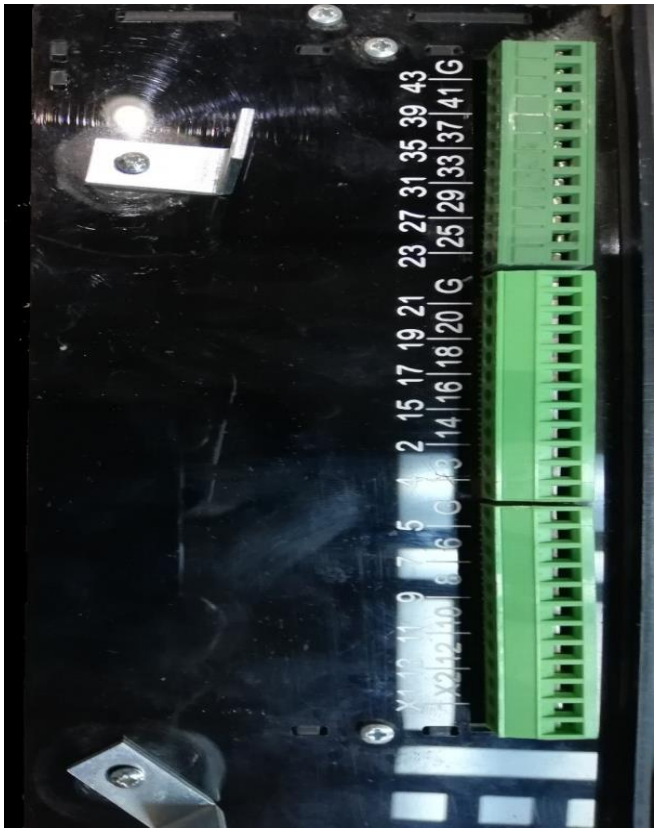

⚠ WARNING

UNINTENDED EQUIPMENT OPERATION
Evaluate the operational state of the equipment being monitored or controlled by the SCADA DLR and the I/O expansion module before removing power.
Failure to follow these instructions can result in death or serious injury.

⚠ WARNING

ELECTRICAL HAZARD
Remove power from the I/O expansion module before mounting it on a DIN rail.
Do not remove the I/O expansion module cover when mounting the module. The I/O expansion module is designed so that it can be mounted on a DIN rail with the cover in place.
Failure to follow these instructions can result in death or serious injury

NOTICE

UNINTENDED EQUIPMENT OPERATION
The mounting position can affect the maximum operating temperature for the I/O expansion module and the current rating for the digital outputs.
Before mounting the I/O expansion module, check the Specifications topic to confirm the maximum operating temperature and digital output current rating for your mounting position.
Failure to follow these instructions can result in equipment damage.

To Mount the 0004 I/O Expansion Module
The illustrations below show how to mount the I/O expansion module on a horizontally oriented DIN rail.
The steps to mount the I/O expansion module on a vertically oriented DIN rail are the same.
1. With the lower part of the module tilted away from the DIN rail, position the mounting guide line on the side of the module so that it is just above the top edge of the DIN rail. Verify that the springs on the back of the module rest on the DIN rail and that the edge of the DIN rail is under the support claws that are adjacent to the springs, as shown below.

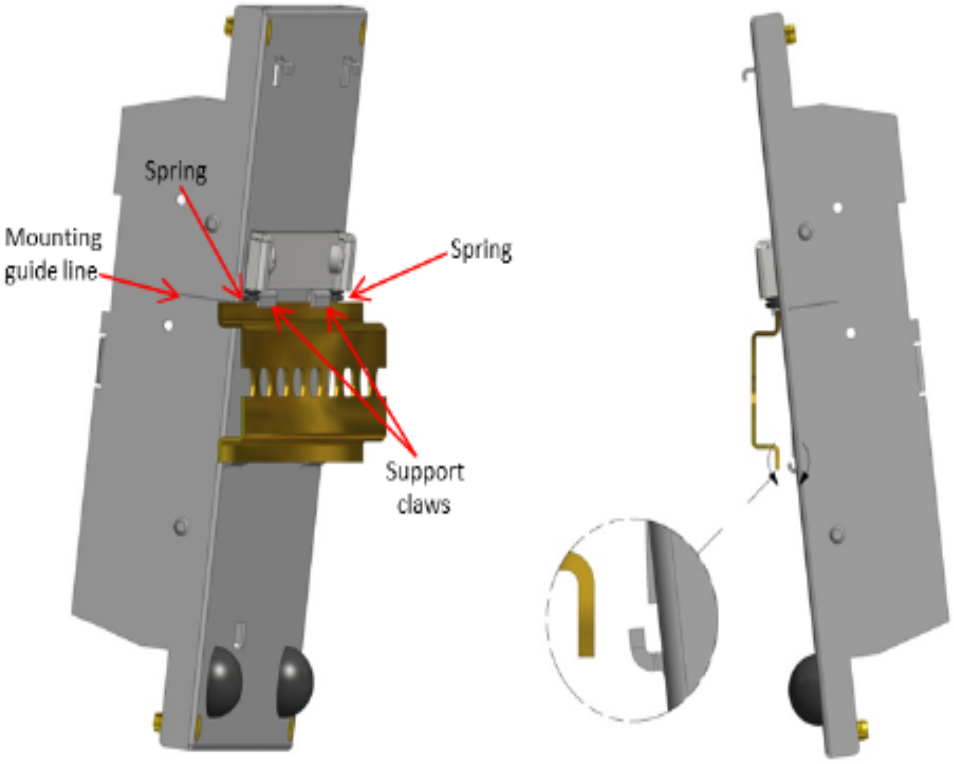

2. Push firmly on the module while tilting it toward the DIN rail until the DIN rail is positioned under both the upper and lower claws on the back of the module.

3 Verify that the mounting guide line is aligned with the edge of the DIN rail, then release the pressure on the springs so that the DIN rail is held firmly in place between the upper and lower claws.

The figure below shows a DIN rail correctly positioned in the upper and lower claws on the back of the I/O module.

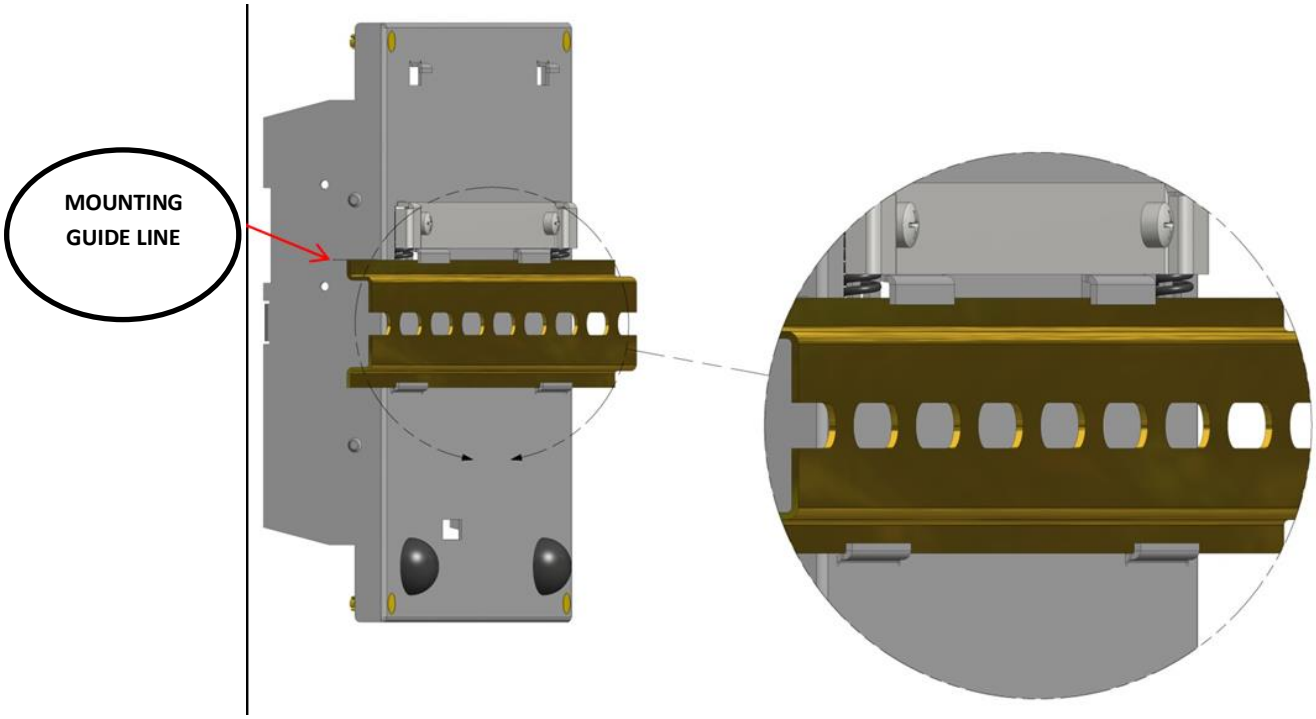
MOUNTING
GUIDE LINE

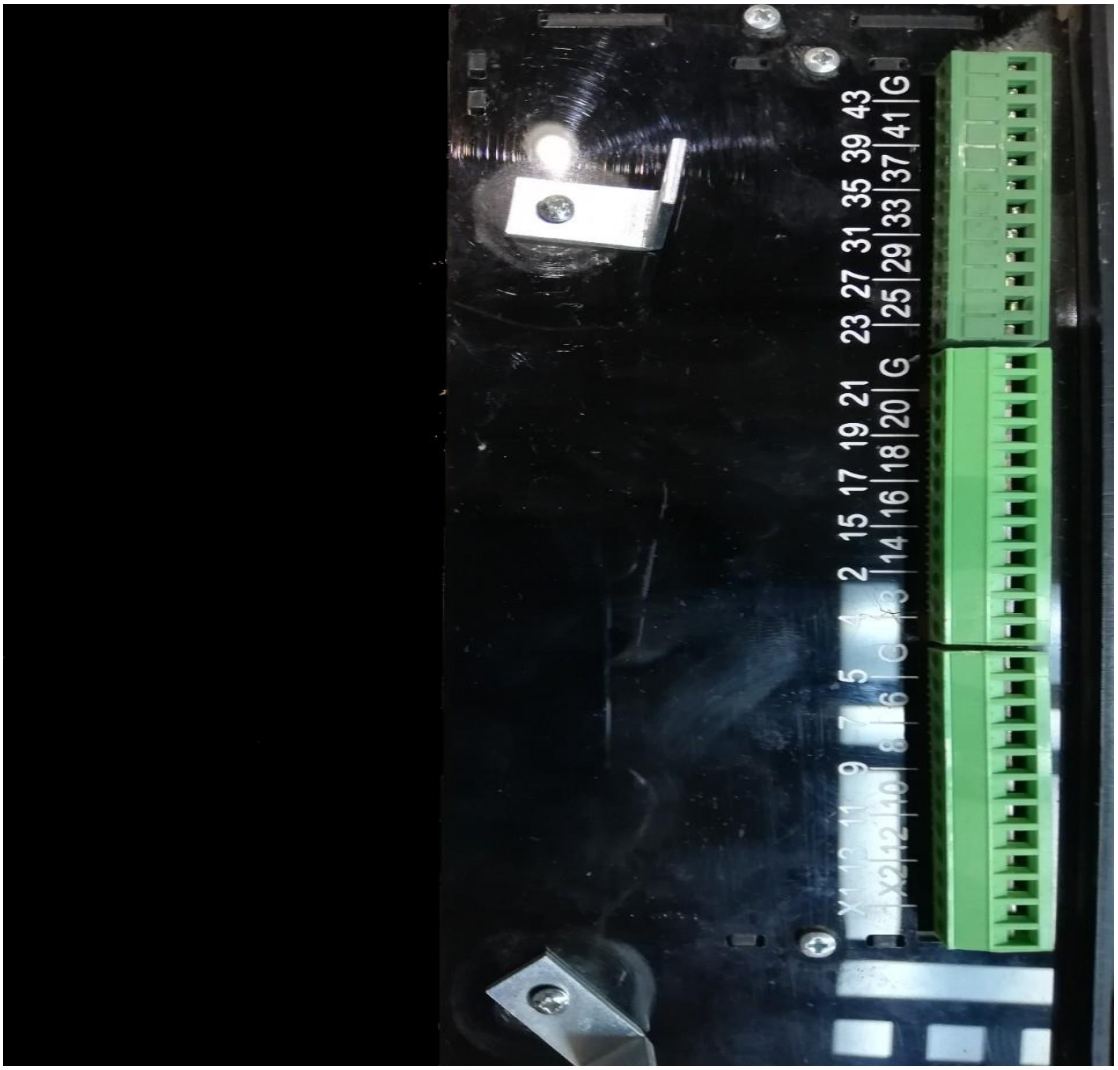
X1 13 11 9 7 5 1
X2 12 10 8 6 G 3
2 15 17 19 21 23 27 31 35 39 43
14 16 18 20 G 25 29 33 37 41 G

8.2 Power Supply Requirements

The 0004 I/O expansion module is powered by the rPAC through the I/O bus cable that connects the
units. Each 0004 I/O expansion module requires 1.1 W at 5 Vdc from the rPAC. You can combine base power, USB Host port, serial port and 0004 I/O expansion module power requirements to a maximum of 9.1 W. For maximum system configurations, see If the optional analog output module was selected when the 0004 I/O expansion module was ordered, an additional 24 Vdc power supply is required to power the field-side circuitry. Each analog output module requires 50 mA current regardless of the system voltage. For information on the configuration options for the analog output power supply
The tables below summarize the power requirements for the SCADDLR 0004 and SCADADLR0003

SCADDLR 0004

Volts In	SCADDLR 0004			**0004 I/O Expansion Module**
Volts (Vdc)	**Base Power (W)**	**USB Host Port (W)** (5 Vdc at 100 mA)	**Serial port (W)** (5 Vdc at 250 mA)	**Per Module (W)**
11.5	3.0	0.6	1.5	1.1
13.8	3.0	0.6	1.5	1.1
24	3.4	0.6	1.5	1.1
30	3.7	0.6	1.5	1.1

SCADADLR0003

Volts In	SCADDLR 0003			**0004 I/O Expansion Module**
Volts (Vdc)	**Base Power (W)**	**USB Host Port (W)** (5 Vdc at 100 mA)	**Serial port (W)** (5 Vdc at 250 mA)	**Per Module (W)**
11.5	4.1	0.6	1.5	1.1
13.8	4.1	0.6	1.5	1.1
24	4.5	0.6	1.5	1.1
30	4.8	0.6	1.5	1.1

⚠ WARNING

UNINTENDED EQUIPMENT OPERATION

The input power supply must be a filtered DC supply.

Failure to follow these instructions can result in death or serious injury.

⚠ WARNING

UNINTENDED EQUIPMENT OPERATION

Safety Extra Low Voltage (SELV) or Protective Extra Low Voltage (PELV) power supplies are required on the power input and I/O points. Power supplies with 100...240 Vac inputs that comply with safety standard IEC/EN 60950 generally have SELV outputs. Check with the manufacturer or the agency certification listing to confirm that they have SELV outputs.

Failure to follow these instructions can result in death or serious injury.

The following Schneider Electric power supply can be used:

- Schneider Electric Phaseo regulated power supply, part number ABL 7RM24025, providing 100...240 Vac in and 24 Vdc, 2.5 A out.

System Grounding

Ground the system by connecting the system power supply common to the chassis or panel ground. On the 6601 I/O expansion module, the power supply common (the "-" connector for the 12...30 Vdc supply) is connected to the chassis internally within the CPU card. As a result, it is not isolated.

None of the 6601 I/O expansion module pins, including any of the commons, are connected to chassis ground. As a result, they are isolated.

8.2.1 Analog Output Power Supply Wiring

There are two configuration options for the external 24 Vdc power supply that is required when the optional analog output module is installed:

- The analog output module and the rPAC can each have their own 24 Vdc power supply. In this configuration, the analog outputs are isolated from the system logic.
- The analog output module can share an external 24 Vdc power supply with the rPAC. In this configuration, the analog outputs are not isolated from the system logic.

NOTICE

UNINTENDED EQUIPMENT OPERATION

Install an external 1.6 A fast-acting fuse on the input voltage side of the rPAC power supply connection.

Install an external 0.063 A fast-acting fuse on the input voltage side of the analog output power supply connection.

Failure to follow these instructions can result in equipment damage.

The following figure illustrates the power supply configurations for isolated and non-isolated analog outputs. For details about wiring the power supply connectors, see

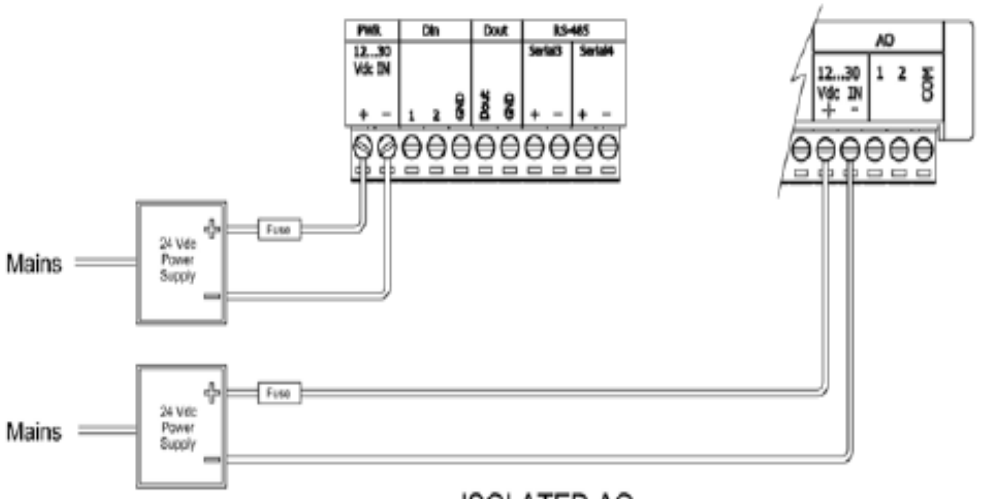

ISOLATED AO

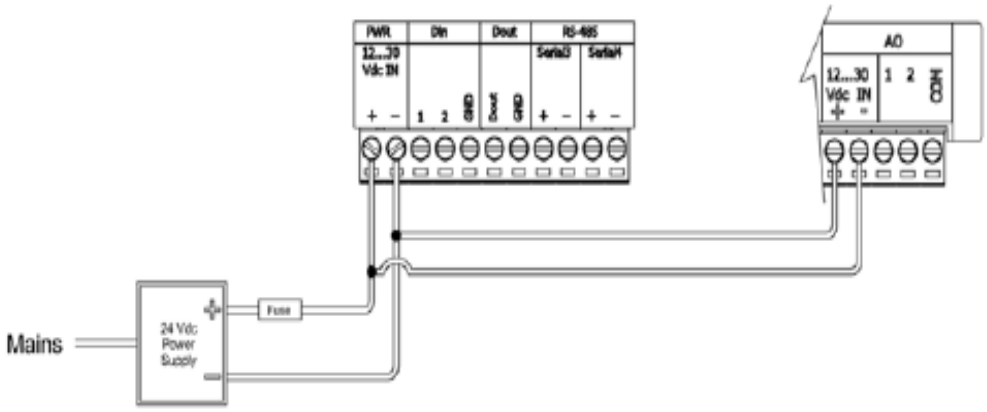

NON-ISOLATED AO

8.3 Connecting I/O Expansion Modules

The topics in this section describe how to attach I/O expansion modules to an rPAC or RTU, or to another I/O expansion module.

I/O expansion modules are mounted on a 7.5 x 35 mm (0.3 x 1.4 in) DIN rail then connected to an rPAC

or RTU using intermodule cables. The intermodule cable is a ribbon cable that distributes power and communications signals from the rPAC or RTU to the I/O expansion modules. These power and communication signals are referred to as the I/O bus.

The figure below shows aor RTU with an I/O expansion module connected to it. You can connect multiple I/O expansion modules to a single rPAC or RTU up to the maximum number of modules supported by the device. See the rPAC or RTU hardware manual for details.

Intermodal cable I/O expiation module Connection point for anther intermodal cable

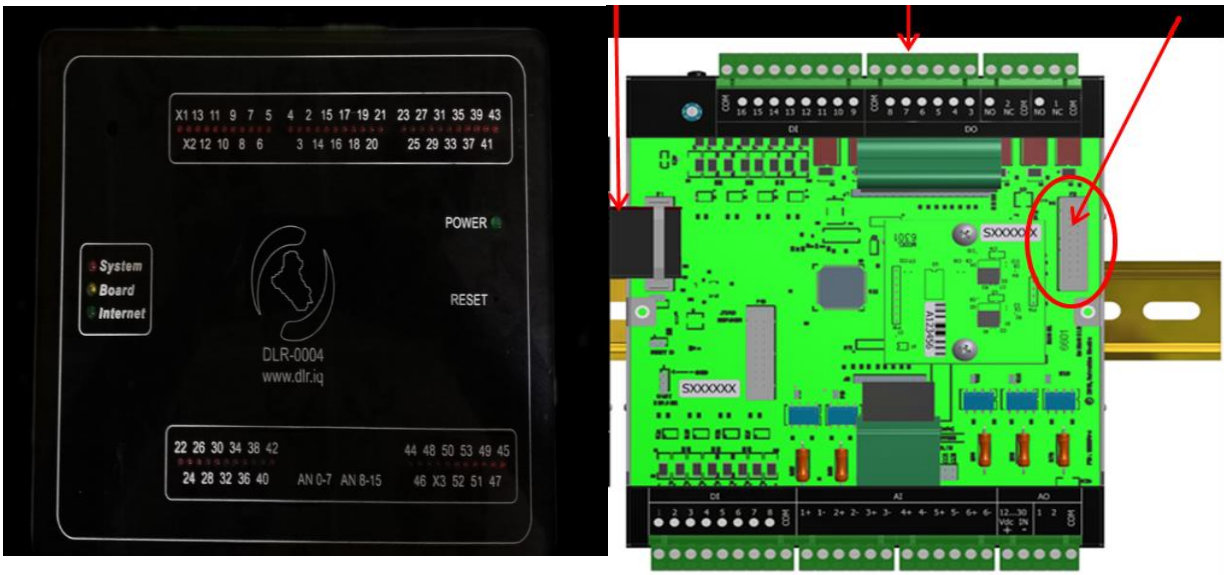

8.3.1 Precautions

Before connecting I/O expansion modules:

- Confirm that the power supply is rated for the total number of modules in the system. Some I/O expansion modules, such as those with analog outputs, require an additional DC power supply to operate. See the I/O expansion module hardware manual for details.
- Confirm that the intermodule cables you are using do not exceed the maximum total cable length.
- Review the recommendations below to help avoid static electricity damage.

NOTICE

STATIC ELECTRICITY DAMAGE

Static electricity damage can cause intermittent or total loss of equipment operation. To help avoid static electricity damage:

- Wear an anti-static wrist strap that is connected to ground if you need to remove the device cover.
- Use the shortest length intermodule cable that is practical. This helps to minimize voltage drops and interference from electrical noise.
- Keep the intermodule cable away from electrical noise sources such as inductive load switching and variable frequency drives.
- If you are using a shielded cable, connect the shielding wire on the intermodule cable to a convenient chassis ground point. There is a small hole in the I/O expansion module for grounding the shielding wire.
- Do not install intermodule cables in the same cable tray or in parallel with field wiring. Intermodule cables can cross field wiring at 90° if necessary.

Failure to follow these instructions can result in equipment damage.

8.3.2 General Connection Rules

This topic summarizes the rules for maximum intermodule cable length and shielded intermodule cables. These rules apply to every SCADAPack E rPAC and RTU.

Maximum Intermodule Cable Length

I/O expansion modules ship with a short intermodule cable that is used to connect to I/O expansion modules to an rPAC or RTU, or to another I/O expansion module.

The maximum total intermodule cable length in a single system is 1.2 m (48 in). This length restriction does not include the short intermodule cable supplied with the I/O expansion module. Schneider Electric offers several cables lengths that can be combined to reach the 1.22 m (48 in) limit.

A 30 cm (12 in) or a 76 cm (30 in) cable is typically used to connect modules on separate DIN rails.

To purchase additional intermodule cables, contact your Schneider Electric representative.

Shielded Intermodule Cables

Intermodal cables longer than 30 cm (12 in) are shielded for physical protection and for protection from electrical noise. Shielded intermodule cables have a foil and braid shielding. The shielding is connected to a terminal lug at one end of the cable.

When using a shield for an intermodule cable, fasten the shield only to the module that is closest to the
rPAC or RTU. Connect the shield to the enclosure using the self-tapping screw provided.

8.3.4 Attaching Intermodule Cables

This topic describes how to attach an intermodule cable between an rPAC or RTU and an I/O expansion module. Follow the same steps to connect two I/O expansion modules.

⚠WARNING

UNINTENDED EQUIPMENT OPERATION

Evaluate the operational state of the equipment being monitored or controlled by the rPAC or RTU and the I/O expansion module before removing power.

Failure to follow these instructions can result in death or serious injury.

⚠WARNING

HAZARD OF ELECTRIC SHOCK

The I/O bus does not support live-swapping.

Remove power from the rPAC or RTU and the I/O expansion module before removing the cover.

Failure to follow these instructions can result in death or serious injury.

NOTICE

STATIC ELECTRICITY DAMAGE

Static electricity damage can cause intermittent or total loss of equipment operation.

Always wear an anti-static wrist strap that is connected to ground when you remove the device cover.

Failure to follow these instructions can result in equipment damage.

Cabling guidance

- Use the shortest length intermodule cable that is practical. This helps to minimize voltage drops and interference from electrical noise.
- Keep the intermodule cable away from electrical noise sources such as inductive load switching and variable frequency drives.
- If you are using a shielded cable, connect the shielding wire on the intermodule cable to a convenient chassis ground point. There is a small hole in the I/O expansion module for grounding the shielding wire.
- Do not install intermodule cables in the same cable tray or in parallel with field wiring. Intermodule cables can cross field wiring at 90° if necessary.

To Attach Intermodule Cables

1. Power down each rPAC, RTU and I/O expansion module that you are connecting.
2. Remove the cover from the device if required to access the intermodule cable.
3. Press one end of the intermodule cable firmly into the I/O bus connector on the rPAC or RTU.
The connectors on intermodule cables are keyed so they can only be inserted in one direction. If the
connector does not push easily into the I/O bus connector, reverse it and try again.
4. Press the other end of the intermodule cable firmly into the I/O bus connector on the I/O expansion module.
The illustration below shows a connected intermodule cable. While the size and shape of your devices may differ, the location of the intermodule cable is the same on each device type.

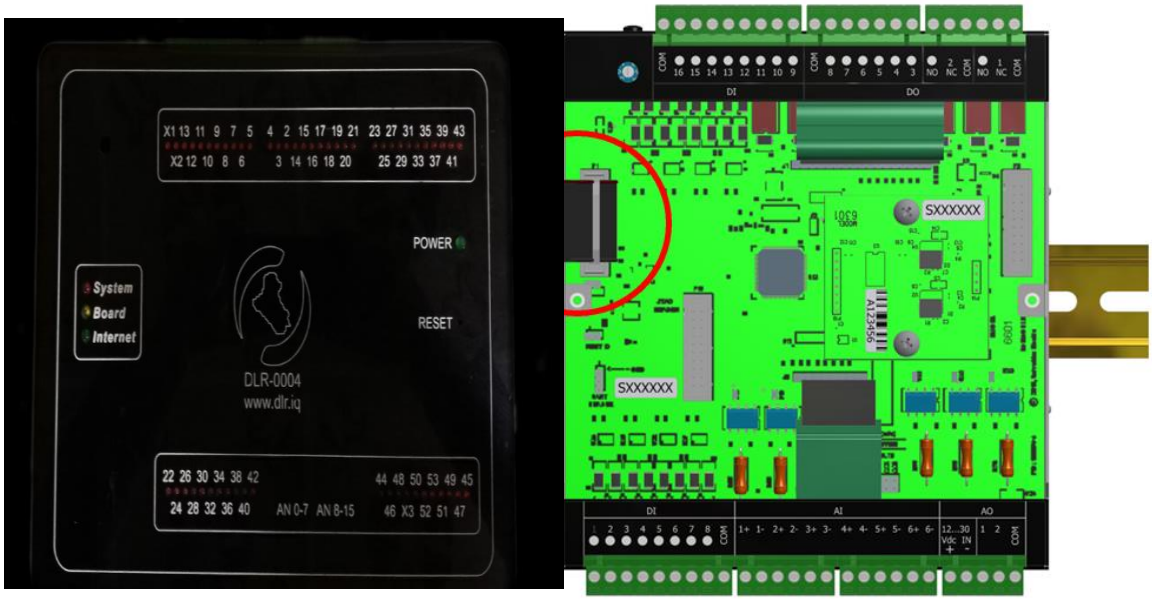

5. Replace the cover on the I/O expansion module, and the rPAC or RTU if it was removed, taking care
to check that the ribbon cable connecting the I/O module is not pinched.
6. Apply power to the rPAC or RTU.
You are now ready to configure the I/O module.

8.4 ATEX and IECEx Requirements

The information in this topic applies when the unit is being used for ATEX and IECEx applications.

Conditions of Safe Use

Before installing the equipment, carefully review the instructions in the warning message below.

WARNING

EXPLOSION HAZARD

Only install this equipment when the following conditions are met:

· USB, Ethernet and Serial sockets can only have connectors fitted within them during service or maintenance when an explosive atmosphere is not present.

· The device is provided with external transient protection of up to 40% (42 Vdc) of the maximum supply voltage (30 Vdc x 1.4 < 42 Vdc).

· The battery in the device is never to be replaced by the user.

· Address switches A and B are not to be operated in a hazardous area or when an explosive atmosphere is present.

· The unit is installed in a certified Control Panel or enclosure, in conformity with type of protection Ex n or Ex e, providing a degree of protection of at least IP54 as defined in IEC 0004 and in an area of Pollution Degree 2 or better as defined in IEC 60664-1.

Failure to follow these instructions can result in death or serious injury.

9- Addressing

WARNING
UNINTENDED EQUIPMENT OPERATION Review the power requirements for 0004 I/O expansion modules before combining modules. **Failure to follow these instructions can result in death or serious injury.**

0004 I/O modules can be combined in any manner up to the maximum number supported by the rPAC.
For details about the maximum supported system configuration
Each 0004 I/O expansion module connected to the rPAC's I/O bus is assigned a unique I/O expansion module address.

9.1 Addressing Rules

I/O expansion modules are shipped from the factory at address 0. If the modules on the I/O bus are different types, for example a digital input module and an analog input module, then no address changes are necessary.

NOTICE
UNDETECTED ADDRESS CONFLICT SCADA DLR0004 and SCADA DLR 0003 do not detect address conflicts on 5000 series I/O expansion modules. As a result, addressing conflicts on these modules do not generate a system error code in SCADADLR0003 Configurator. Verify that each 5000 series I/O expansion module is addressed according to the rules below. **Failure to follow these instructions can result in equipment damage.**

If you do need to set the hardware address on your I/O expansion module, keep the following in mind:
· No two digital input modules can have the same address.
· No two digital output modules can have the same address.
· No two analog input modules can have the same address (including the 5505 RTD).
· No two analog output modules can have the same address.

· The 5606, 5607, 5608 and 5610 I/O expansion modules can be configured for addresses 0 to 7. As a

result, a total of 8 of these modules, in any combination, is supported on the I/O bus at one time.

· The 5606 and 5607 I/O expansion modules share the same address numbering; if both these modules
are installed on the same I/O bus, they need to have unique address numbers.

The table below summarizes the number of I/O expansion module hardware addresses available on each
rPAC or RTU type. The number of modules that can be connected to each rPAC or RTU depends on the
device type. For details, see the hardware manual.

Device Type	Number of I/O Expansion Addresses Available
SCADADLR0004	48
SCADADLR0003	38
SCADADLR0002	16

9.2 Setting the I/O Expansion Module Address

By default, the 0004 I/O expansion module physical address is set to 0. To avoid conflict with the addresses of other I/O expansion modules on the same rPAC I/O bus, the address can be set anywhere in the range 0-F.

WARNING

UNINTENDED EQUIPMENT OPERATION
Evaluate the operational state of the equipment being monitored or controlled by the rPAC and the I/O expansion module before removing power.
Failure to follow these instructions can result in death or serious injury.

WARNING

UNINTENDED EQUIPMENT OPERATION
Remove power from the I/O expansion module before initially setting the I/O expansion module address and before changing the I/O expansion module address.
Failure to follow these instructions can result in death or serious injury.

WARNING

UNINTENDED EQUIPMENT OPERATION
Be very careful that you do not set the I/O expansion module address to an address that is assigned to another 0004 I/O expansion module connected to the same rPAC I/O bus.
If two 0004 I/O expansions modules have the same address, you will lose communications with both modules.
Failure to follow these instructions can result in death or serious injury.

To Set or Change an I/O Expansion Module Address
1. Remove power from the I/O expansion module.
2. Insert a 2.4 mm (3/32 in) slotted screwdriver into the inner circle of the rotary hex switch.

3. Slowly turn the screwdriver until the small arrowhead points to the correct address.
4. Reconnect power to the I/O expansion module.

10 Field Wiring

Each input and output on the 0004 I/O expansion module can be connected to a device that you want to
monitor or control. In general, inputs are used to monitor devices, while outputs are used to control
devices.

10.1 Wiring Screw-Termination Connectors

Screw-termination style connectors are provided to terminate wiring from:

- Power supplies
- RS485 devices
- Input/output (I/O) devices

These 5 mm (0.197 in) pitch connectors support solid or stranded wires from 3.3...0.08 mm^2 (12...28 AWG).

To Wire a Connector

1. Use a slotted screwdriver to loosen the termination screw.

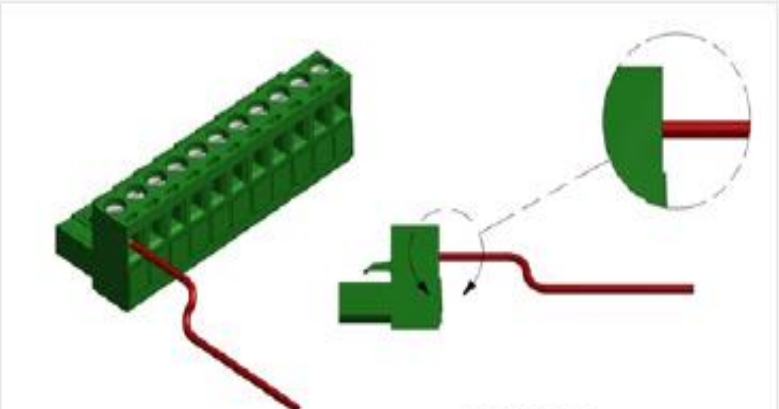

10.2 Digital and Counter InputWiring

The topic in this section describes the wiring for the digital and counter inputs.

10.2.1 Digital and Counter Input Wiring Example

⚠WARNING

HAZARD OF ELECTRIC SHOCK

Remove power from all devices before connecting or disconnecting inputs or outputs to any terminal or installing or removing any hardware.

Failure to follow these instructions can result in death or serious injury.

Field Wiring

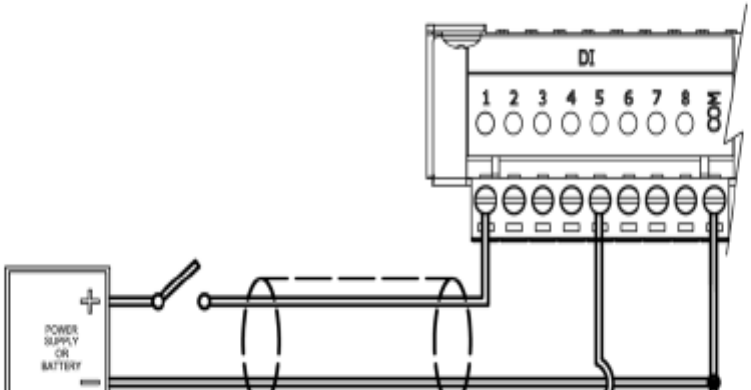

10.3 Digital OutputWiring

The topic in this section describes the wiring for the digital outputs.

10.3.1 Digital Output Wiring Examples

⚠WARNING

HAZARD OF ELECTRIC SHOCK

Remove power from all devices before connecting or disconnecting inputs or outputs to any terminal or installing or removing any hardware.

Failure to follow these instructions can result in death or serious injury.

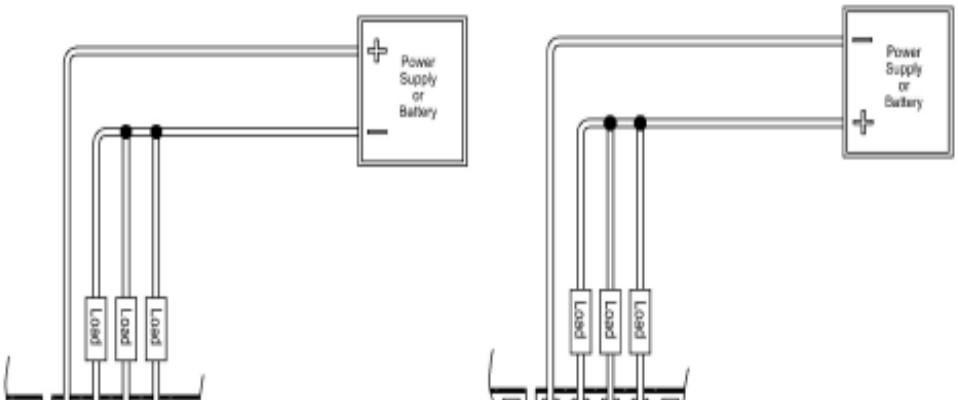
Load
Load
Load
Power
Supply
or
Battery
Load
Load
Load
Power
Supply
or
Battery

10.4.1 Analog Input Wiring Example

The analog inputs support loop-powered and self-powered transmitters.

⚠WARNING

HAZARD OF ELECTRIC SHOCK

Remove power from all devices before connecting or disconnecting inputs or outputs to any terminal or installing or removing any hardware.

Failure to follow these instructions can result in death or serious injury.

Field Wiring

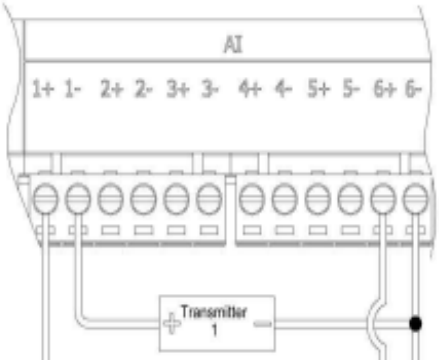

10.4.2 Supporting a Mix of Current and Voltage Inputs

The unit is shipped with the six analog inputs configured for DC Current or DC Voltage. However, you can change the input mode for individual analog inputs to support a mix of current and voltage analog inputs if needed.

The unit is factory-calibrated for 0...20 mA and 4...20 mA current inputs and for 0...5 Vdc and 1...5 Vdc operation so there is no need to adjust the calibration when you change the input mode for an analog input.

The table below summarizes the options for supporting a mix of current and voltage analog inputs.

Analog Inputs	Ways to Support a Mix of Current and	Considerations	Instructions

Field Wiring

- On analog input 2, the voltage input flows directly into the physical input.

This wiring approach allows you to configure the current loop so it is not interrupted if the unit requires servicing. For details,

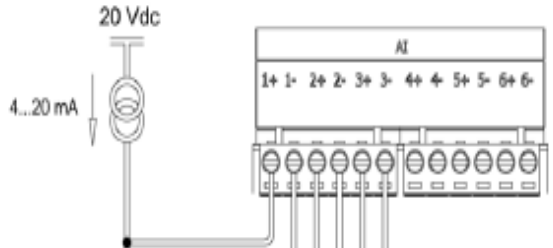

Changing the Input Mode for an Analog Input

The procedure below describes how to move the dip switches on the back of the unit to change the
analog input mode from DC Voltage to DC Current, or from DC Current to DC Voltage mode.

If you have open access to the back of the unit, where the dip switches are located, you do not need to
remove the unit from the DIN rail or the wiring from the unit to access the dip switches. In this case, skip
to step 4 in the procedure below.
If you do not have open access to the back of the unit, you need to remove the unit from the DIN rail and
you will likely need to remove the wiring from the unit to access the dip switches. In this case, follow the
procedure below from step 1. Carefully consider the precautions below before proceeding.

To change the input mode for an analog input

⚠WARNING

UNINTENDED EQUIPMENT OPERATION

Evaluate the operational state of the equipment being monitored or controlled by the SCADAPack E rPAC and the I/O expansion module before removing power.

Failure to follow these instructions can result in death or serious injury.

⚠WARNING

ELECTRICAL HAZARD

Remove power from all devices before connecting or disconnecting inputs or outputs to any terminal or installing or removing any hardware.

Failure to follow these instructions can result in death or serious injury.

1. Remove power from the unit.
2. Disconnect power, I/O and serial port wiring.
3. Remove the unit from the DIN rail.

   To remove the unit from the DIN rail, press down on the top of the unit to compress the mounting springs while tilting the bottom of the unit toward you. When the DIN rail is free of the lower claws on the back of the rPAC, gently lift the unit away from the DIN rail.
4. On the back of the unit, locate the dip switch for the analog input that you want to reconfigure.

   The dip switch numbers correspond to the analog input numbers. For example, to change the input mode for analog input 1, move dip switch 1. The figure below shows the six dip switches configured for DC Current.

Field Wiring

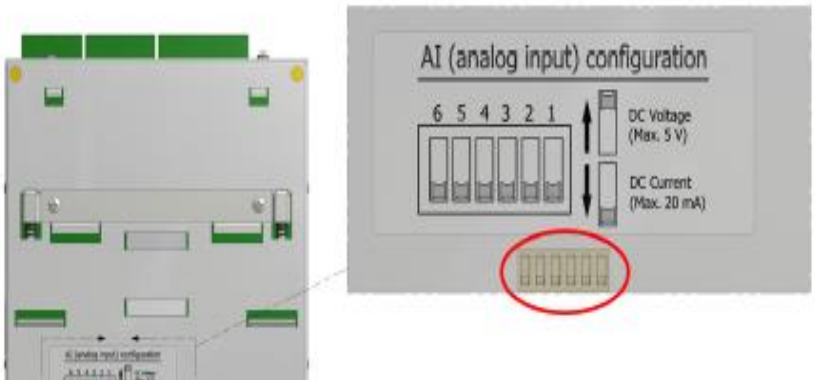

6. Remount the unit on the DIN rail.

NOTICE

UNINTENDED EQUIPMENT OPERATION

Do not connect I/O devices that exceed the maximum current or voltage for an analog input.

The maximum DC current for an analog input is 20 mA.

The maximum DC voltage for an analog input is 5 Vdc.

10.4.3 Helping to Prevent Interruption of the Current Loop

⚠WARNING

ELECTRICAL HAZARD

Remove power from all devices before connecting or disconnecting inputs or outputs to any terminal or installing or removing any hardware.

Failure to follow these instructions can result in death or serious injury.

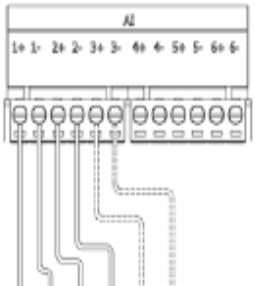
AI
1+ 1- 2+ 2- 3+ 3- 4+ 4- 5+ 5- 6+ 6-

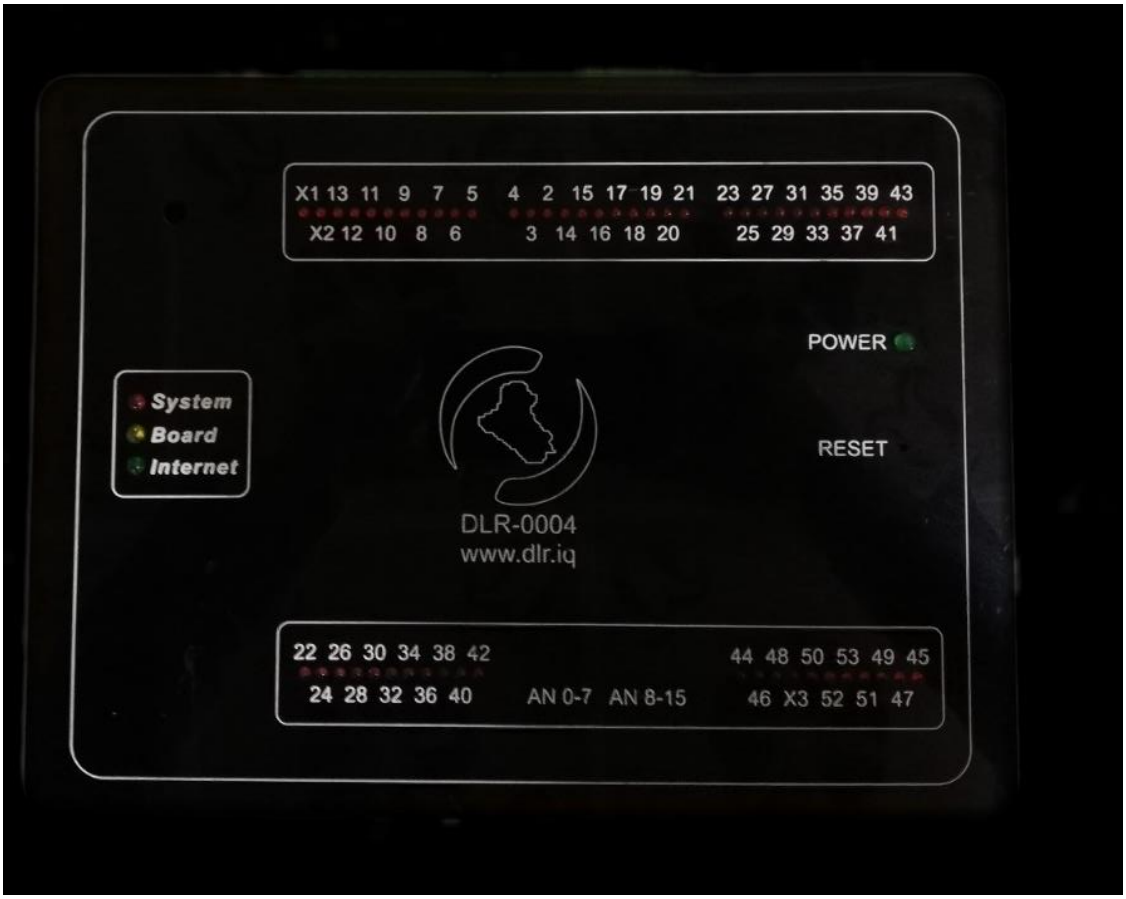
X1 13 11 9 7 5 4 2 15 17 19 21 23 27 31 35 39 43
X2 12 10 8 6 3 14 16 18 20 25 29 33 37 41
POWER
System
Board
Internet
RESET
DLR-0004
www.dlr.iq
22 26 30 34 38 42
24 28 32 36 40
AN 0-7 AN 8-15
44 48 50 53 49 45
46 X3 52 51 47

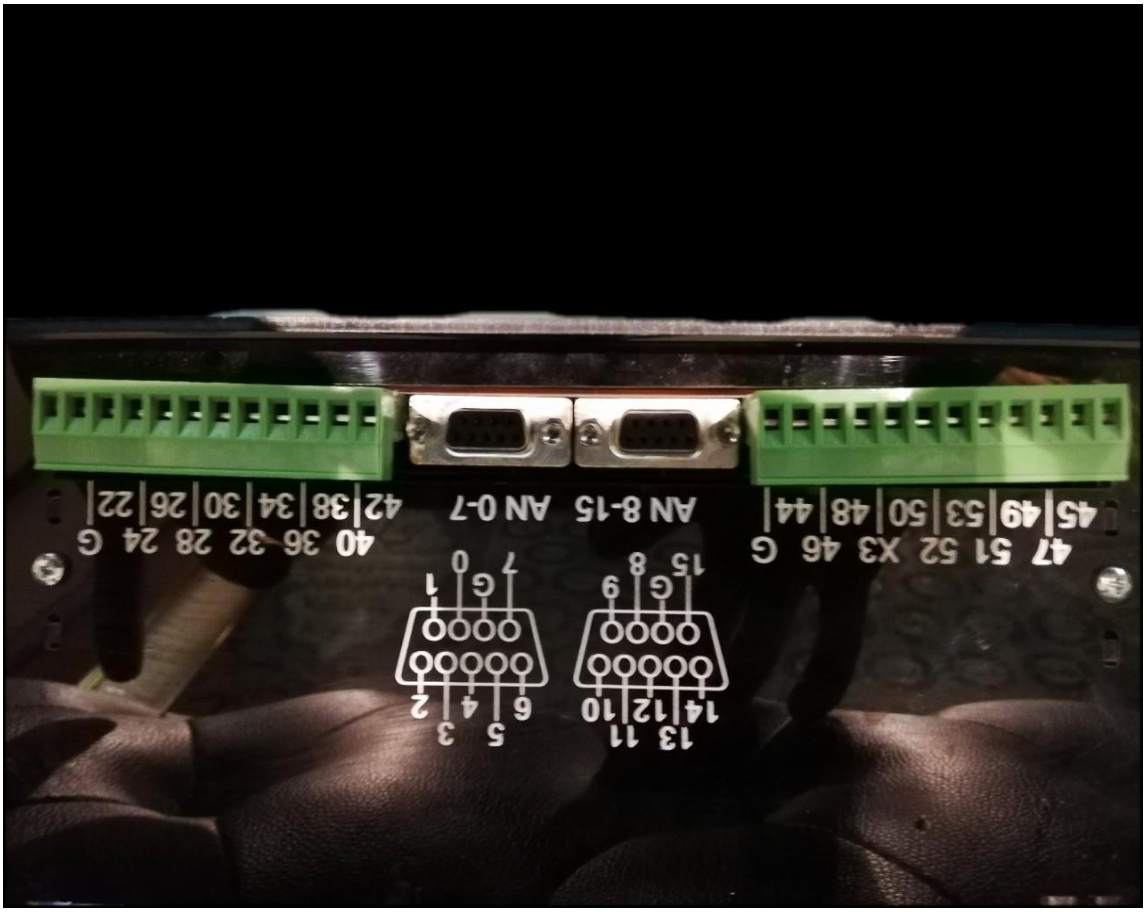
13 11
14 12 10
5 3
6 4 2
G 9
15 8
G 1
7 0
47 51 52 X3 46 G
45 49 53 50 48 44
40 36 32 28 24 G
42 38 34 30 26 22
AN 8-15 AN 0-7

10.5.1 Analog Output Wiring Example

The figure below shows loads connected to the two analog outputs.

⚠WARNING

HAZARD OF ELECTRIC SHOCK

Remove power from all devices before connecting or disconnecting inputs or outputs to any terminal or installing or removing any hardware.

Failure to follow these instructions can result in death or serious injury.

NOTICE

UNINTENDED EQUIPMENT OPERATION

Install a 0.063A fast-acting fuse on the input voltage side of the analog output power supply connection.

Failure to follow these instructions can result in equipment damage.

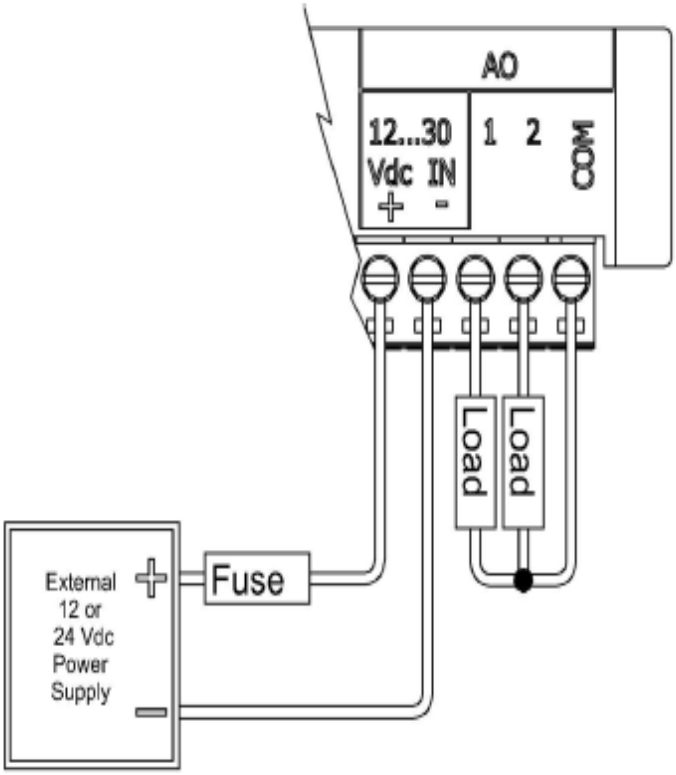

The analog output circuitry is configured internally to receive power from an external power supply on pins 1 and 2 of the removable terminal block. Pin 5 (Com 1-2) and pin 2 (power input –) are connected internally. As illustrated in the following figure, the two analog outputs are not isolated from each other, but are isolated from the rPAC logic.

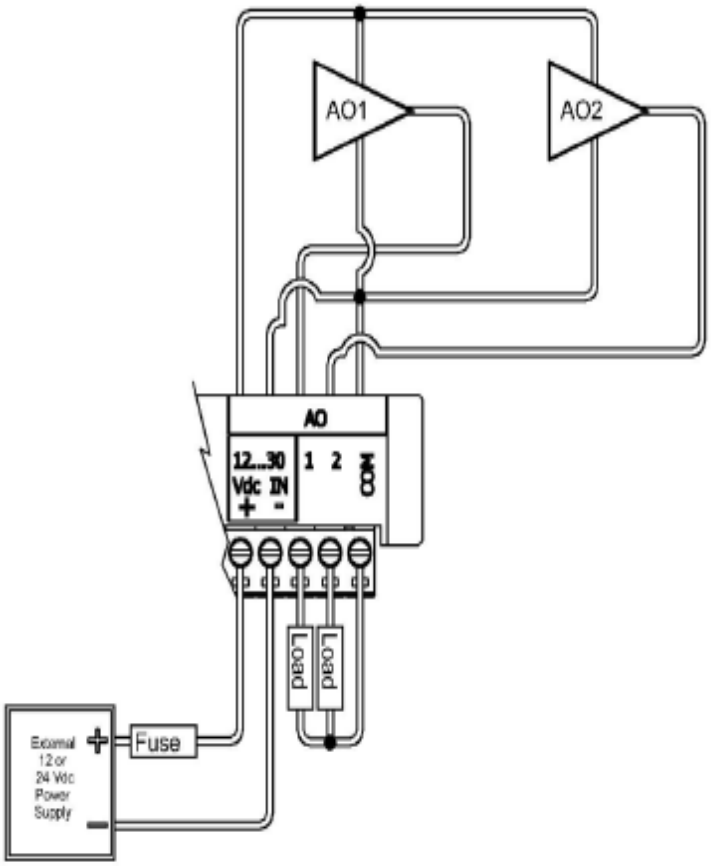

10.5.2 Supporting Current and Voltage Outputs

The analog outputs can be configured for 4...20 mA current or 0...20 mA current.

If a voltage output is required (1...5 Vdc, for example), run the 4...20 mA or 0...20 mA signal to the device that requires voltage input and place a 250 ohm resistor across the input terminals on the device. With this resistor in place, the analog output is electrically isolated from the rest of the rPAC, but is not isolated from the power supply.

The table below lists resistance values and output range settings for common voltage ranges. The resistance value listed is the parallel resistance of the device and the load resistor.

Resistance	Output Range	Voltage Range
250 ohm	0...20 mA 4...20 mA	0...5 Vdc 1...5 Vdc
500 ohm	0...20 mA	0...10 Vdc

11 Configuration

The inputs and outputs on the 0004 I/O expansion module can be configured:
· Locally or remotely using SCADADLR , a software application that runs on a desktop or laptop computer.
· Remotely as part of an end-to-end SCADA system using the StruxureWare SCADA Expert ClearSCADA software.
· Locally using applications created in SCADADLR Workbench .
Before you begin configuring the inputs and outputs on the 0004 I/O expansion module, determine
whether the SCADA Expert ClearSCADA software will be used for any configuration tasks. This documentation assumes you are using the SCADA DLR Configurator software to configure the 0004 I/O expansion module. For information about using the ClearSCADA software, see the ClearSCADA documentation.

11.1 Configuring with SCADADLR Configurator

The SCADADLR Configurator software provides a graphical user interface that allows you to configure
the inputs and outputs and to load those settings onto the rPAC. It also integrates with SCADAPack
Workbench and ISaGRAF 3 Workbench so you can build and diagnose IEC61131-3 sequences that
extend the rPAC capabilities.
If you begin configuration in the SCADAPack E Configurator software, you cannot switch to the
StruxureWare SCADA Expert ClearSCADA software. Similarly, if you begin configuration in the SCADA
Expert ClearSCADA software, you cannot switch to the SCADADLR Configurator software.
The following table summarizes where in the SCADADLR Configurator software you will find the
configurable attributes for the 0004 I/O expansion module inputs and outputs. The configuration fields are displayed when you double click on the input or output in the table.

Hardware Label	**SCADADLR Configurator Folder**	**SCADA DLR Configurator Property Pages**
DI	Points	Binary Points Counter Points
	I/O	SCADADLR IO
DO	Points	Binary Points
	I/O	SCADADLR IO
AI	Points	Analog Points
	I/O	SCADADLR IO
AO	Points	Analog Points
	I/O	SCADADLR IO

The figure below illustrates the SCADA DLR I/O property page and the location of the other property

pages listed in the table. For details about using SCADADLR0003 Configurator, refer to the SCADADLR0004
Configurator User Manual.

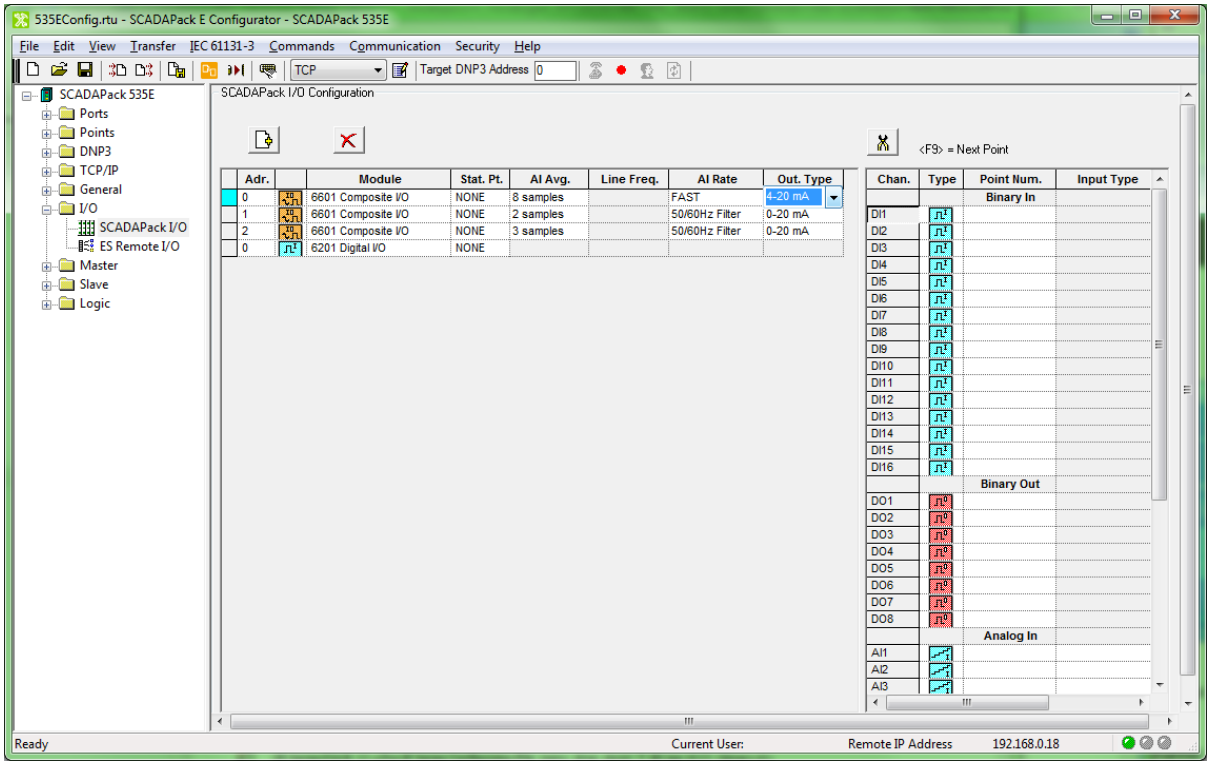

11.2 Reading and Writing Data with Logic Programs

DLR0004 applications use I/O connections to the SCADADLR points database to access
physical I/O points and derived data.
To write digital data, including digital output points, use SCADAPack Workbench RTU_BIN_WRITE I/O
devices.
To read or write data to the digital inputs or outputs in ISaGRAF 3 Workbench applications, use rtuxxdi,
rtuxxdo or rtuxxdos I/O boards.

Reading and Writing Analog Input Data

SCADADLR Workbench applications can read analog data, including analog input points, using
RTU_RAW_READ or RTU_ENG_READ I/O devices.

For ISaGRAF 3 Workbench applications, use rtuxxai I/O boards to read the analog inputs.
Configuration for points attached to the analog input channels uses the DLR RAW_MIN,
RAW_MAX and ENG_MIN, ENG_MAX parameters for integer and engineering scaling, respectively.
These scaling ranges apply to the analog input signal range selected in SCADA DLR Configurator for
each analog input channel.

12 Diagnostics and Troubleshooting

The 0004 I/O expansion module provides LEDs that indicate the status of inputs and outputs. There are
also a number of troubleshooting actions you can take to determine the cause of unexpected activities.

12.1 LEDs

The 0004 I/O expansion module provides an LED for each digital input and digital output. When the LED
is on, the input or output is energized, meaning it has an active connection. Digital input LEDs blink
when pulses are applied if the digital input is configured to be a counter.

12.2 Analog Inputs and Outputs

Analog Inputs

Condition	Action
20 mA inputs read 0.	Check transmitter power.
Reading is at or near 0 for every input signals.	Check if the input transient suppressors are damaged.
20 mA readings are not accurate.	Check for a damaged 250 ohm current sense resistor.
Reading is constant.	Check that the analog input is not forced.
Reading seems out of calibration for small inputs but improves as input increases.	Check the input range setting.
In Current Loop Mode, there can be an open circuit in the Current Loop.	See Configuring Analog Inputs as Current Inputs 68.
Other devices are not functional after installation of the 6601 I/O expansion module.	In Current Loop mode, make the 6601 I/O expansion module the last device in the loop or use a signal isolator as described in Configuring Analog Inputs as Current Inputs 68.

Analog Outputs

Condition	Action
Outputs are 0 mA.	Check whether the optional analog output module was ordered with the I/O expansion module. The analog output module is installed at the factory prior to delivery. Check the 24 Vdc power supply.
The full-scale output is less than 20 mA.	Check the 24 Vdc power supply. Check that the load resistance is within specification.
Output is constant instead of changing.	Check that the analog outputs are not forced.

12.3 Digital Inputs and Outputs

Digital Inputs

Condition	Action
Input LED does not come on when input signal is applied.	Check that the input signal at the termination block is at least 50% of the digital input range. If this is a DC input, check the polarity of the signal.
Input is on when no signal is applied. The LED is off.	Check that the digital inputs are not forced on.
Input is off when a signal is applied. The LED is on.	Check that the digital inputs are not forced off.

Digital Outputs

Condition	Action
Output LED does not come on when output is turned on.	Check the Power LED on the rPAC.
Output LED comes on but the output does not close.	Check if the relay is stuck. If so, return the board for repair.
Output LED comes on and output is closed, but the field device is not activated.	Check the field wiring. Check the external device.
Output LED and relay are on instead of off.	Check that the output is not forced on.
Output LED and relay are off when instead of on.	Check that the output is not forced off.

13 Calibration

The 0004 I/O expansion module is electronically calibrated at the factory during the manufacturing
process and after any repair procedures.
There are no user calibration procedures.

14 Maintenance

The 0004 I/O expansion module requires no routine maintenance. If the module is not functioning
correctly, contact us for more information and instructions for returning the module for repair.
When required, you can update the firmware on the 0004 I/O expansion module.

14.1 Updating Operating System Firmware

The operating system firmware on 0004 series I/O modules can be updated locally or remotely, as described below.

I/O Module	Firmware Filename
0004	Fw0004.bin

WARNING

LOSS OF CONTROL
During a firmware update, the 0004 series I/O module does not monitor or control any of the devices to which it is connected. Before updating firmware:
- Confirm that you are connected to the correct rPAC.
- Evaluate the operational state of the devices that are monitored and controlled by the I/O module.

Failure to follow these instructions can result in death or serious injury.

WARNING

UNINTENDED EQUIPMENT OPERATION
Do not remove power from the rPAC during the firmware update.
Do not disconnect the 0004 series I/O module from the rPAC during the firmware update.
If power is interrupted for any reason during the firmware update, contact Technical Support.
Failure to follow these instructions can result in death or serious injury.

NOTICE

INCOMPATIBLE FIRMWARE VERSIONS

Before installing a firmware update, check the Release Notes for the firmware update to determine the most suitable firmware version for the rPAC firmware version and the functionality you are using. **Failure to follow these instructions can result in equipment damage.**

To Update 0004 Series I/O Firmware

1. Use FTP or SCADADLR Configurator to transfer the file **fw0004.bin** to the rPAC file system.

- If you are using FTP, set the transfer mode to binary before transferring the file.
- If you are using the SCADA DLR Configurator DNP file transfer capability, select **Transfer >**

Write File from the main menu.

2. Access the local or remote command line tool and type the following command:

`restart iofirm fw0004.bin` *`board_number`*

where *`board_number`* is the number of the I/O expansion module.

For 0004 I/O expansion modules, the board number is a number from 0 to 15.

Example: `restart iofirm fw0004.bin 1`

WARNING
UNINTENDED EQUIPMENT OPERATION If the firmware update was unsuccessful, the I/O module will remain in a state where it does not monitor or control any of the devices to which it is connected. Carefully review the message indicating whether the firmware update was successful or unsuccessful. Unsuccessful firmware updates are also reported through analog system point 50020. **Failure to follow these instructions can result in death or serious injury.**

3. After the device has restarted, select **Read from Device** in SCADA DLR Configurator, then go to
the Controller Status property page and verify that the **0004 I/O Ver.** field was correctly updated.

14.2 Updating Boot Monitor Firmware

The boot monitor firmware on 0004 series I/O modules can be updated locally or remotely, as described below.

WARNING
LOSS OF CONTROL During a boot monitor update, the 0004 series I/O module does not monitor or

control any of the devices to which it is connected. Before updating the boot monitor on the I/O module:

- Confirm that you are connected to the correct rPAC.
- Evaluate the operational state of the devices that are monitored and controlled by the I/O module.

Failure to follow these instructions can result in death or serious injury.

⚠WARNING

UNINTENDED EQUIPMENT OPERATION

Do not remove power from the rPAC during the boot monitor update.

Do not disconnect the 6000 series I/O module from the rPAC during the boot monitor update.

If power is interrupted for any reason during the boot monitor update, contact Technical Support.

Failure to follow these instructions can result in death or serious injury.

NOTICE

INCOMPATIBLE FIRMWARE VERSIONS

Before installing a boot monitor update, check the Release Notes for the boot monitor update to determine the most suitable I/O module boot monitor version for the rPAC firmware version and the functionality you are using.

Failure to follow these instructions can result in equipment damage.

To Update 6000 Series I/O Boot Monitor Firmware

1. Use FTP or SCADAPack E Configurator to transfer the file **bl6601.bin** to the rPAC file system.
   - If you are using FTP, set the transfer mode to binary before transferring the file.
   - If you are using the SCADAPack E Configurator DNP file transfer capability, select **Transfer > Write File** from the main menu.
2. Access the local or remote command line tool and type the following command:

   ```
   restart iofirm bl6601.bin board_number
   ```

   where *board_number* is the number of the I/O expansion module.

   For 6601 I/O expansion modules, the board number is a number from 0 to 15.

   Example: `restart iofirm bl6601.bin 1`

⚠WARNING

UNINTENDED EQUIPMENT OPERATION

If the boot monitor update was unsuccessful, the I/O module will remain in a state where it does not monitor or control any of the devices to which it is connected.

Carefully review the message indicating whether the boot monitor update was successful or unsuccessful. Unsuccessful boot monitor updates are also reported through analog system point 50020.

Failure to follow these instructions can result in death or serious injury.

15 Specifications

Disclaimer: Schneider Electric reserves the right to change product specifications without notice. If you
have questions about any of the specifications, contact Technical Support .

The following topics provide detailed hardware specifications for the 0004 I/O expansion module and its
inputs and outputs.

15.1 General

Environment	-40…70 °C (-40…158 °F) operating temperature when the unit is mounted horizontally on a vertical surface -40…65 °C (-40…149 °F) operating temperature when the unit is mounted in any other position -40…85 °C (-40…185 °F) storage temperature 5...95% relative humidity, non-condensing Pollution Degree 2, Installation Category I, Indoor use
Elevation	3,000 m (9,842 ft)
Terminations	3.3...0.08 mm^2 (12...28 AWG), solid or stranded
Packaging	Corrosion-resistant zinc-plated steel with black enamel paint
SCADAPack 530E Dimensions	151 mm (5.9 in) wide 135 mm (5.3 in) high 75 mm (3.0 in) deep
SCADAPack 535E Dimensions	151 mm (5.9 in) wide 182 mm (7.2 in) high 87 mm (3.4 in) deep
Mechanical Shock	IEC 61131-2 ½ sine, 15 ms, 15 g
Vibration	IEC 61131-2 5...8.4 Hz: Amplitude controlled, 7.0 mm (0.28 in) peak-to-peak 8.4...150 Hz: Acceleration controlled, 1.0 g peak

15.2 Power Supply

Input Voltage	5 Vdc power, which is provided by the rPAC through the I/O bus cable that connects the units.
Maximum System Configuration with 6000 Series I/O Expansion Modules Only	SCADA DLR 0004 I/O expansion modules SCADA DLR 0003 I/O expansion modules
Maximum System Configuration with a Mix of 5000 Series and 6000 Series I/O Expansion Modules	SCADA DLR 0004 using 3.7 W plus any combination of serial port, USB Host port, and I/O expansion modules up to 5.4 W SCADA DLR 0003 using 4.8 W plus any combination of serial port, USB Host port, and I/O expansion modules up to 4.3 W
Maximum Power Requirements	SCADA DLR 0004: 9.1 W SCADA DLR 0003: 9.1 W
Isolation	Controller board power input, USB and serial communication ports are not isolated from the enclosure See the relevant specifications for I/O point isolation information
Protection	Protected up to 60 Vdc for over-voltages and reverse polarity voltages Inrush current limited

15.3 Digital and Counter Inputs

Digital Inputs

Typical Operating Voltage	12 Vdc 24 Vdc
Turn-on Voltage	Minimum: 9 Vdc
Turn-off Voltage	Maximum: 4 Vdc
Over-Voltage Tolerance	36 Vdc sustained over-voltage without foreseeable damage
Input Current	0.9…1.2 mA at 12 Vdc 2.1…2.4 mA at 24 Vdc
Time Stamping	1 ms Sequence of Event (SOE)
Isolation	Isolation is in 2 groups of 8 Isolation from device logic and chassis 1000 Vac or 1500 Vdc

Counter Inputs

Electrical Characteristics	Shared with digital input channels
Reporting	16-bit and 32-bit counters Deviation Time-stamped events Polled, unsolicited reporting
Frequency	Up to 8 channels: DI 1 to 4: 0...1.5 kHz DI 5 to 8: 0...150 Hz

15.4 Digital Outputs

Type	2 Form C SPDT relays available to the application Separate Normally Open/Normally Closed/Common 6 Form A relays available to the application Normally Open, one Common
Isolation	500 Vac minimum to device logic
Maximum Switching Voltage	30 Vdc or 25 Vac
Maximum Switching Load	60 W or 50 VA per relay 2 A per relay 2 A per common on digital outputs 1-2 12 A per common on digital outputs 3-8
Status and Reporting	Individual relay pole feedback to software Output state poll
Temperature De-rating	Mounted horizontally on a vertical surface: - 2 A maximum per relay at 60 °C (140 °F) - De-rate by 0.1 A per 1 °C to 1 A maximum per relay at a maximum ambient temperature of 70 °C (158 °F) Mounted in any other position: - 2 A maximum per relay at 60 °C (140 °F) - De-rate by 0.1 A per 1 °C to 1.5 A maximum per relay at a maximum ambient temperature of 65 °C (149 °F)
Controls	Direct Operate Select Before Operate Trip/Close Latch Pulse

15.5 Analog Inputs

Type	Uni-polar, differential, voltage or current
Resolution (filtered)	24-bit conversion yields an effective 19 bits of resolution during filtered conversions 10 uV on the 5 Vdc range 40 nA resolution on the 20 mA range
Resolution (fast)	24-bit conversion yields an effective 13 bits of resolution during unfiltered conversions. 0.6 mV resolution on the 5 Vdc range 2.4 uA resolution on the 20 mA range
Accuracy	±0.1% of full scale at 25 °C (77 °F) ±0.2% over-temperature range
Isolation	250 Vac from device logic and chassis 60 Vdc between inputs Transformer
Input Resistance	250 ohms in current configuration 800 kohms in voltage configuration
Range	Input Type: 4...20 mA, 0...20 mA, 1...5 Vdc, or 0...5 Vdc Under-range: 4...20 mA measures to 0 mA, 1...5 Vdc measures to 0 Vdc Individual inputs can be configured for current or voltage operation using DIP switches. Calibration in voltage mode 1...5 Vdc is available as an option. Contact factory for custom calibrations
Sampling Rate	Filtered: 500 ms per 6 channels Fast: 30 ms per 6 channels
Common Mode Rejection	80 dB
Normal Mode Rejection	Filtered: 86 dB (50/60 Hz) Fast: Not applicable
Status	ADC reference check
Reporting	Deviation 8 alarm limits Under- and over-range events Quality flags

	Integer/floating point Time-stamped events Polled, unsolicited reporting on deviation and per alarm limit
Time Stamping	30 ms Sequence of Event (SOE)
Cable Length	Maximum: 30 m (98.4 ft)

15.6 Analog Outputs

Type	Uni-polar
Resolution	12-bit over 0...20 mA range
Accuracy	±0.15% at 25 °C (77 °F) ±0.35% of full scale over-temperature range
Response Time	Less than 10 µs for 10% to 90% signal change
Power Supply (External)	12...30 Vdc
Power Supply Cable Length	Maximum: 30 m (98.4 ft)
Power (Current) Requirements	10 mA plus up to 20 mA per output
Isolation	Transformer 500 Vdc maximum to device logic and chassis
Range	0...20 mA 4...20 mA Voltage output may be accomplished with external precision resistor
Status & Reporting	Power missing Open loop detected Values out of range ADC reference check
Controls	Direct Operate Select Before Operate
Load Range	12 Vdc: 0...475 ohms 24 Vdc: 0...1075 ohms 30 Vdc: 250...1375 ohms

SCADA DLR0004
Karada , Arasat Alhindya 929, st.30 , 29 Opposite of Pappa Roti rest.
Baghdad, Iraq.
Direct Worldwide: **009647726699333**
www.info@dlr.iq
www.dlr.iq